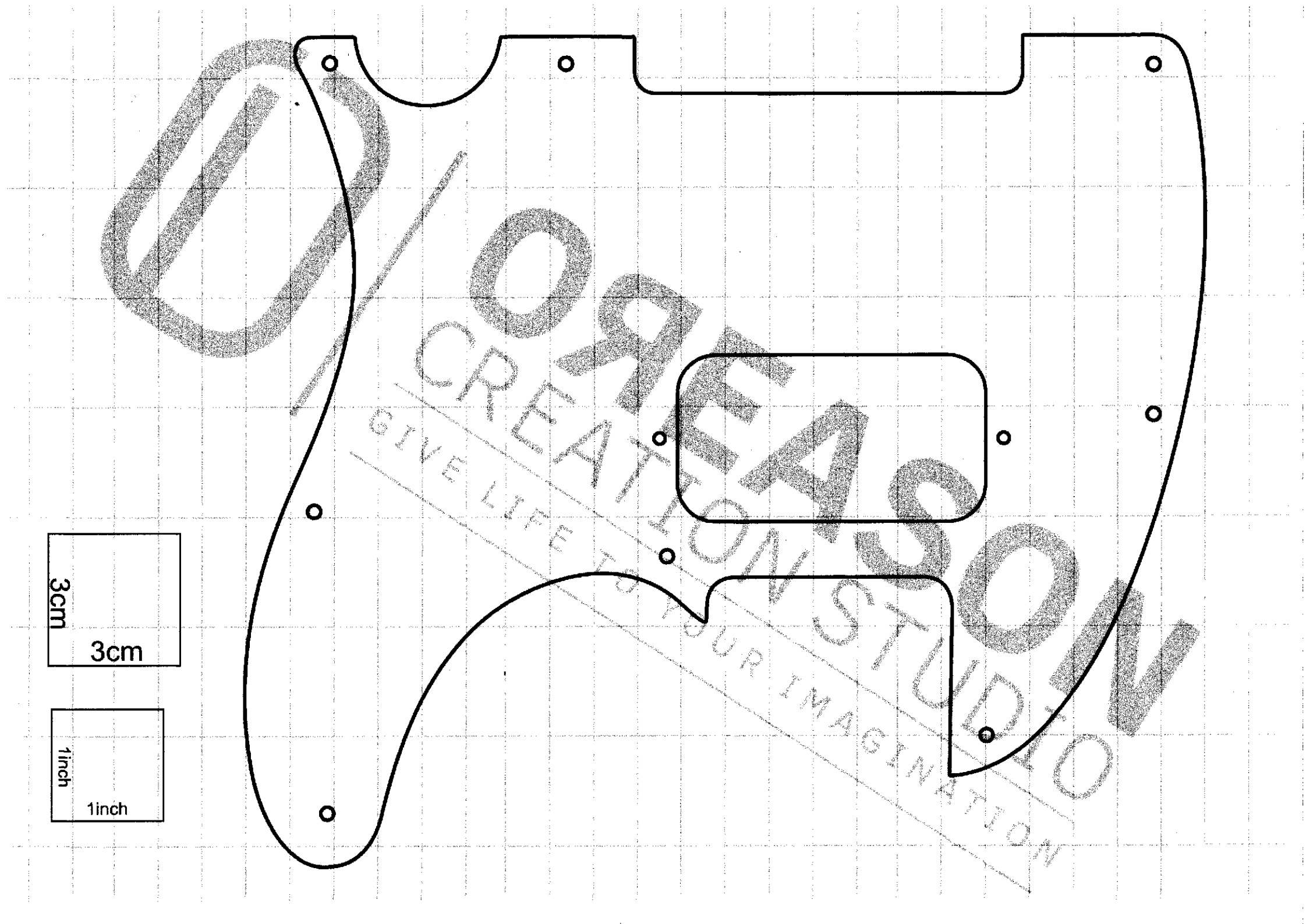

DOREASON CREATION STUDIO
GIVE LIFE TO YOUR IMAGINATION