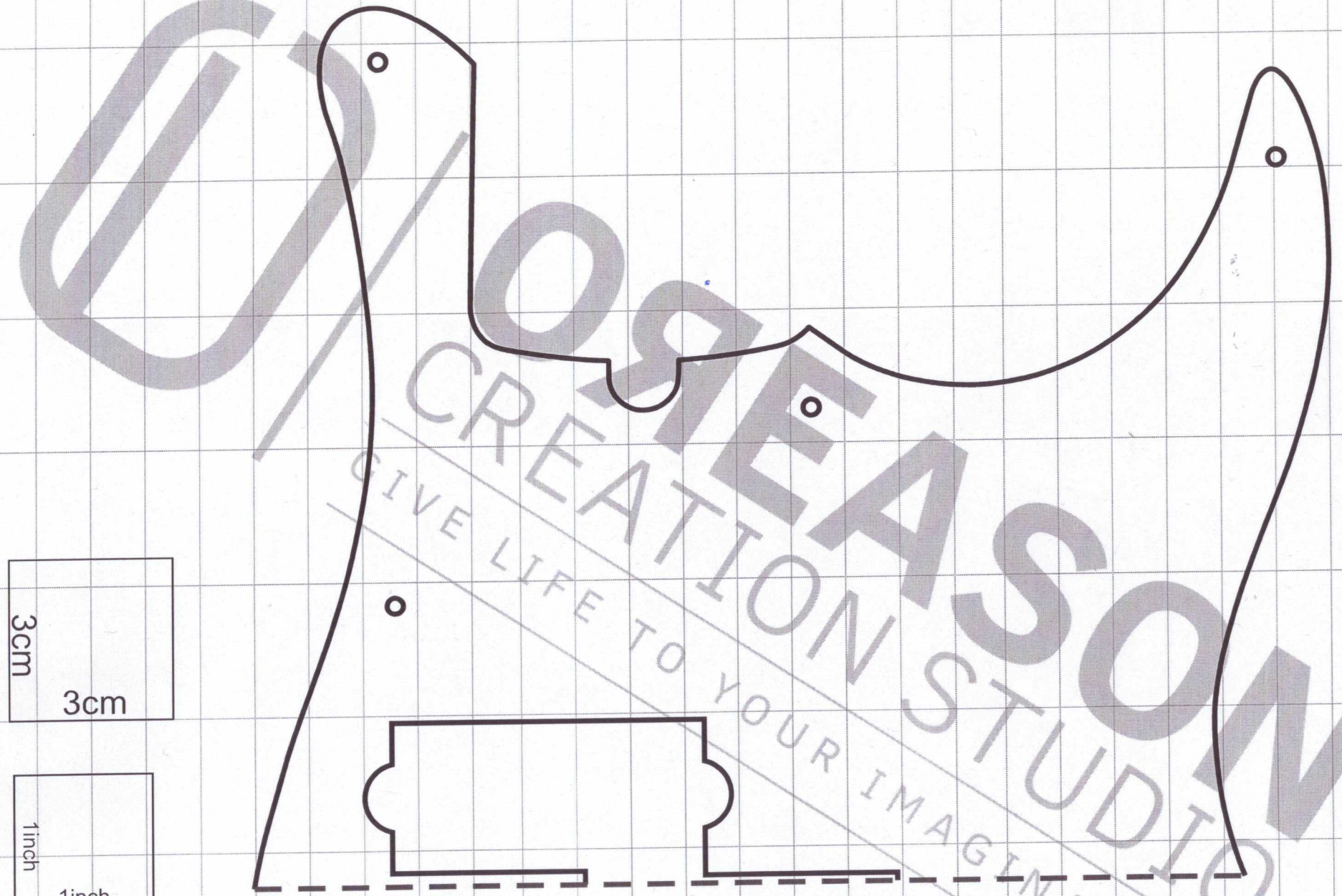

ORIGIN
CREATION STUDIO
GIVE LIFE TO YOUR IMAGINATION

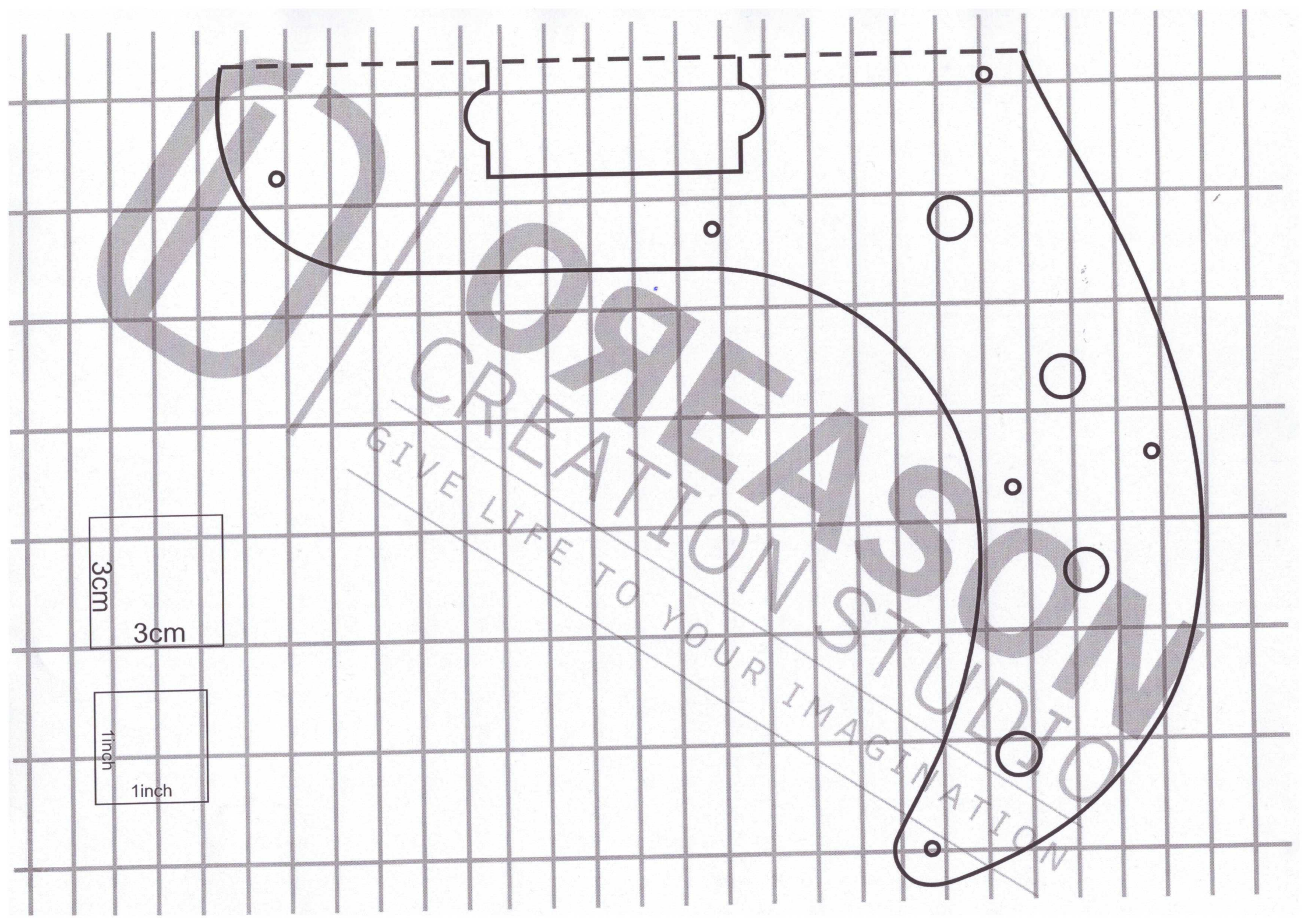
3cm
3cm
1inch
1inch