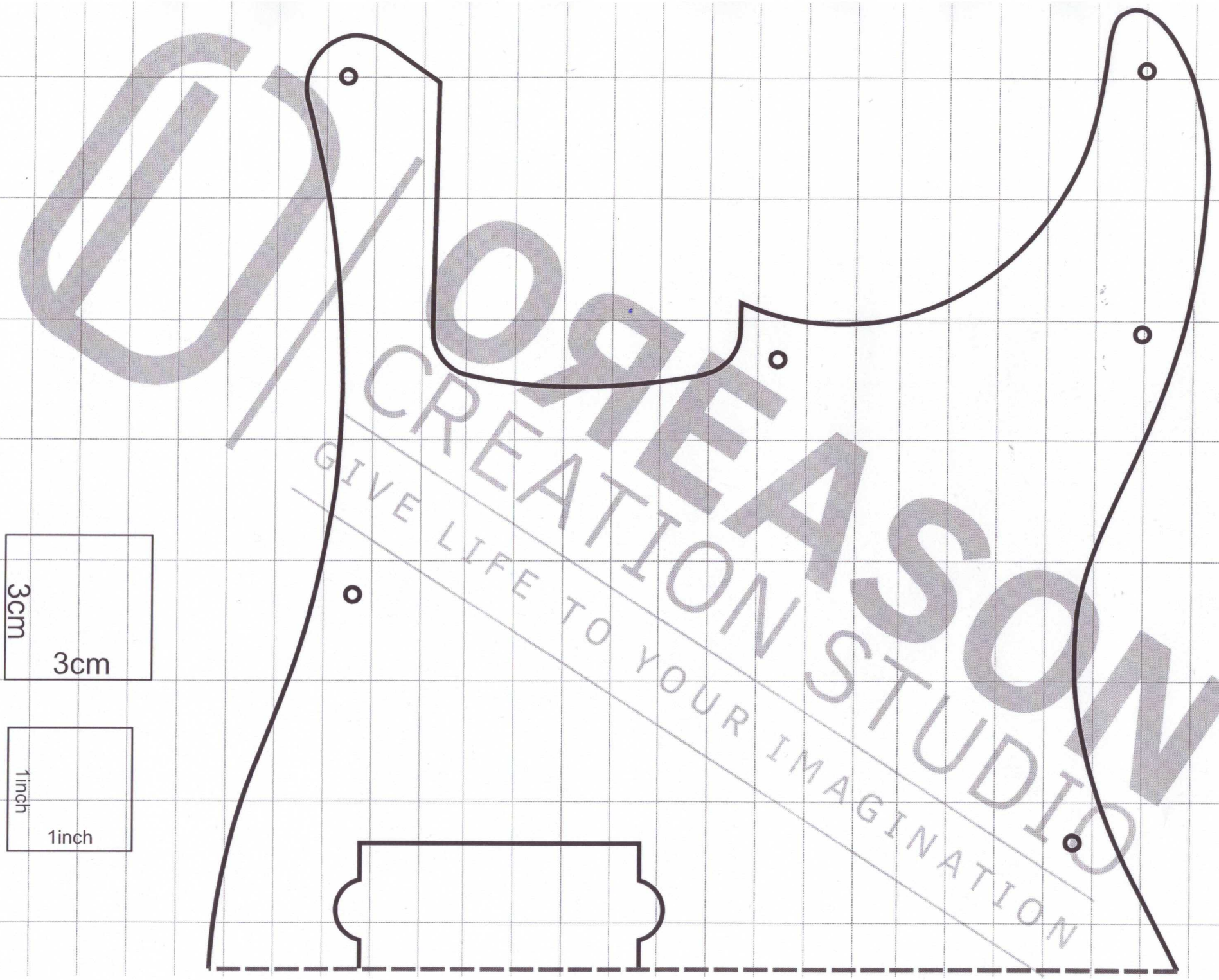

ORTEASON
CREATION STUDIO
GIVE LIFE TO YOUR IMAGINATION

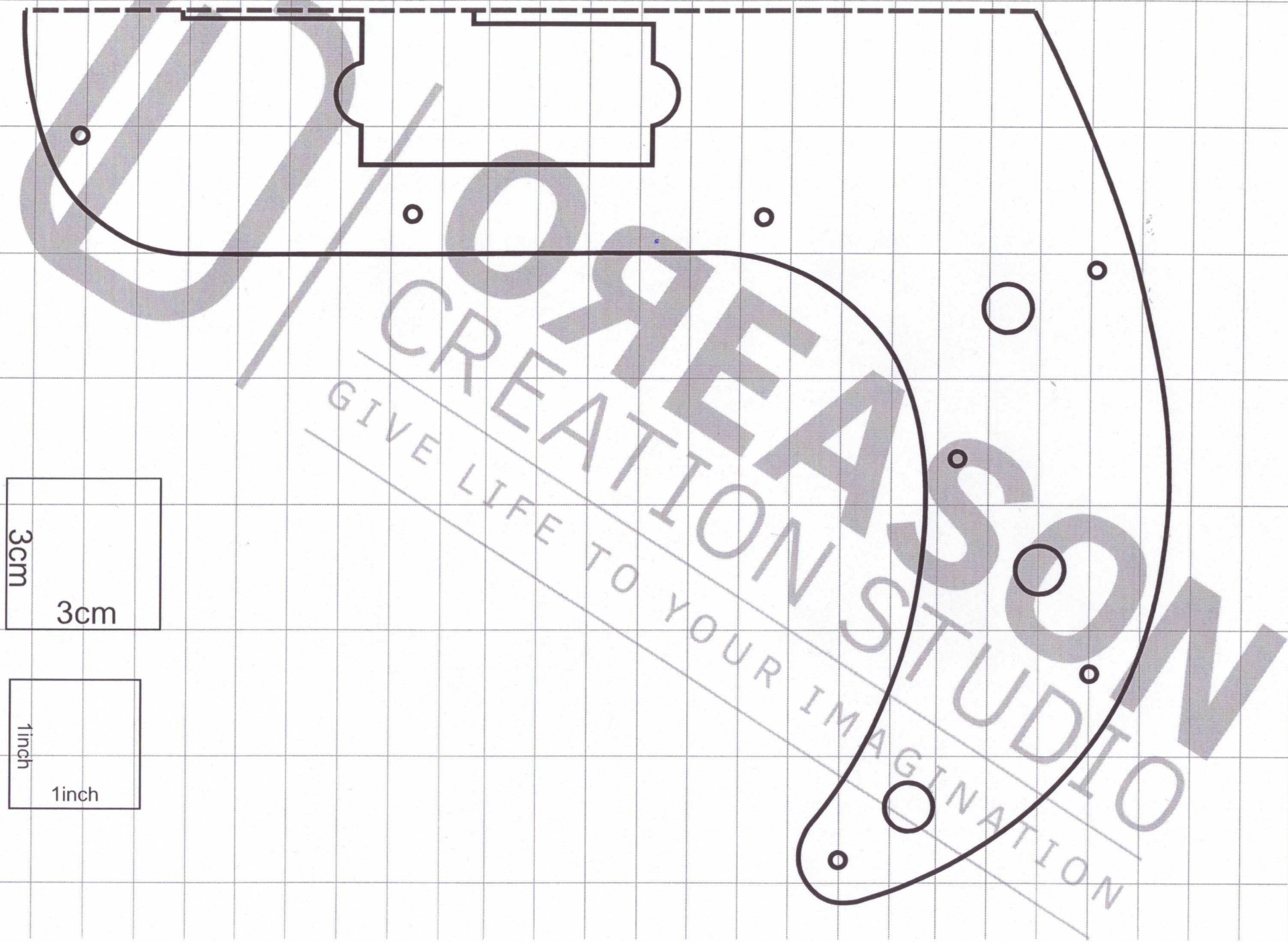

ORIGAMI REASON
CREATION STUDIO
GIVE LIFE TO YOUR IMAGINATION