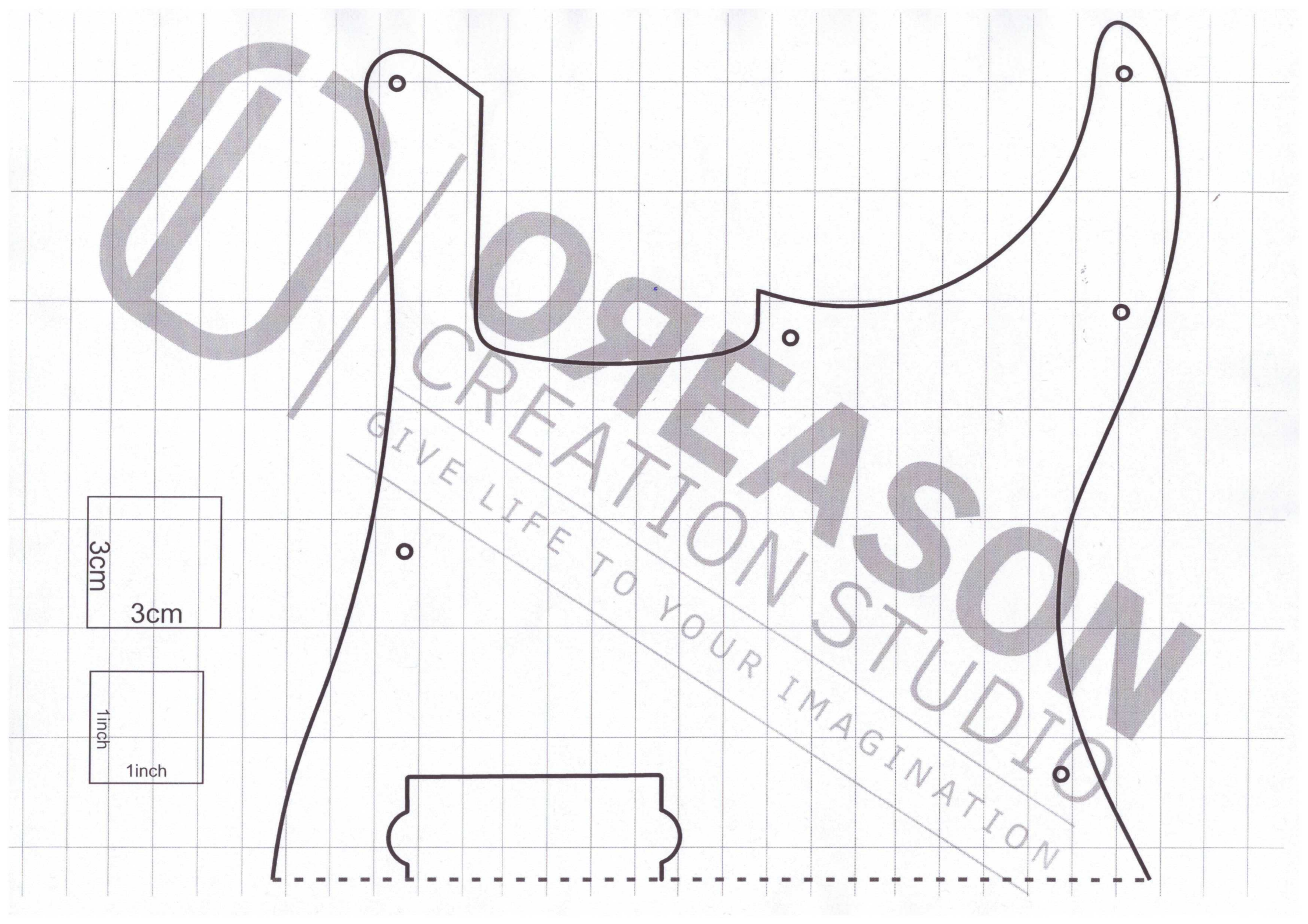

ORTEASON
CREATION STUDIO
GIVE LIFE TO YOUR IMAGINATION

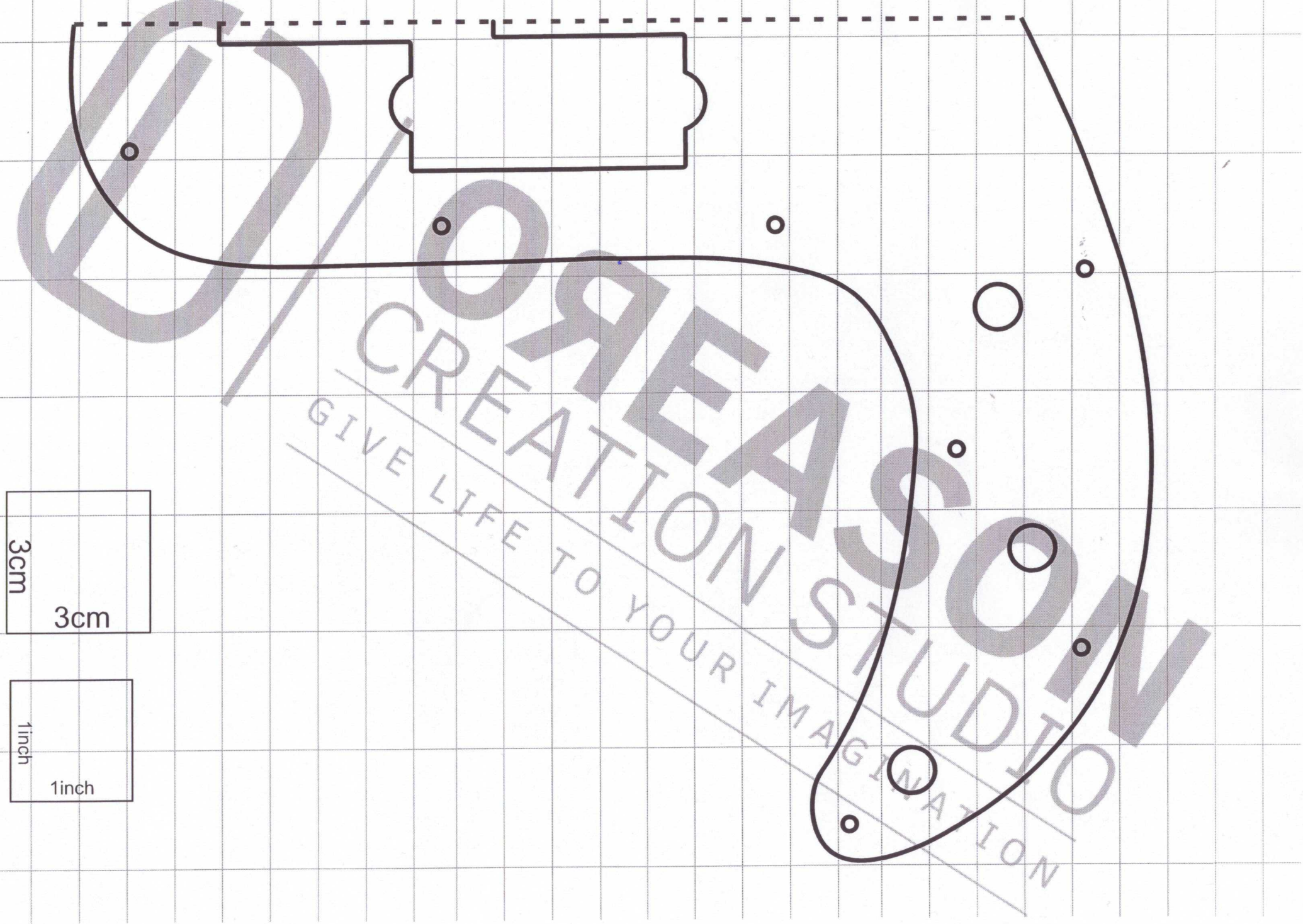

ORIGAMI CREATION STUDIO
GIVE LIFE TO YOUR IMAGINATION