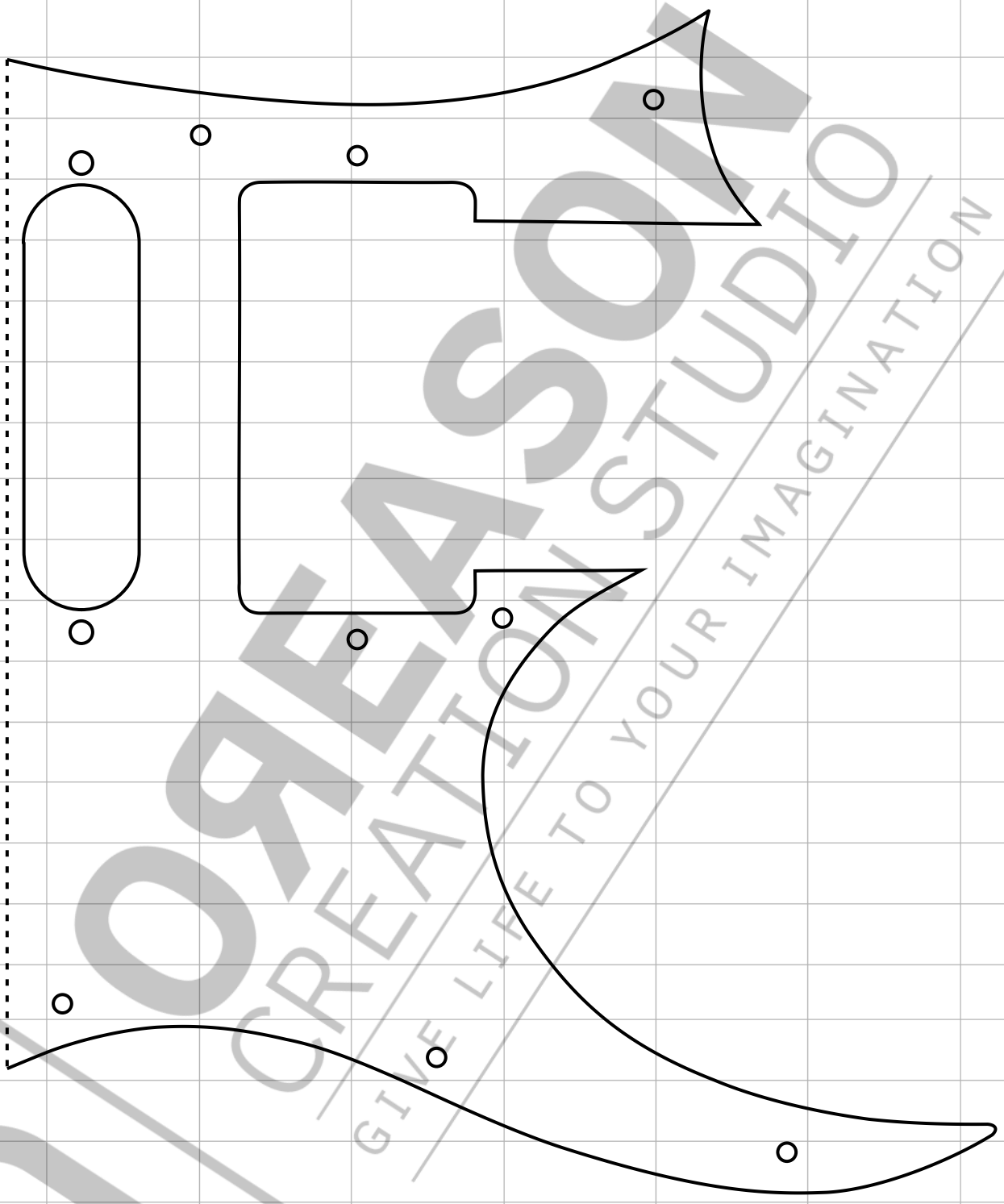

3cm

3cm

1inch

1inch

DREASON
CREATION STUDIO
GIVE LIFE TO YOUR IMAGINATION

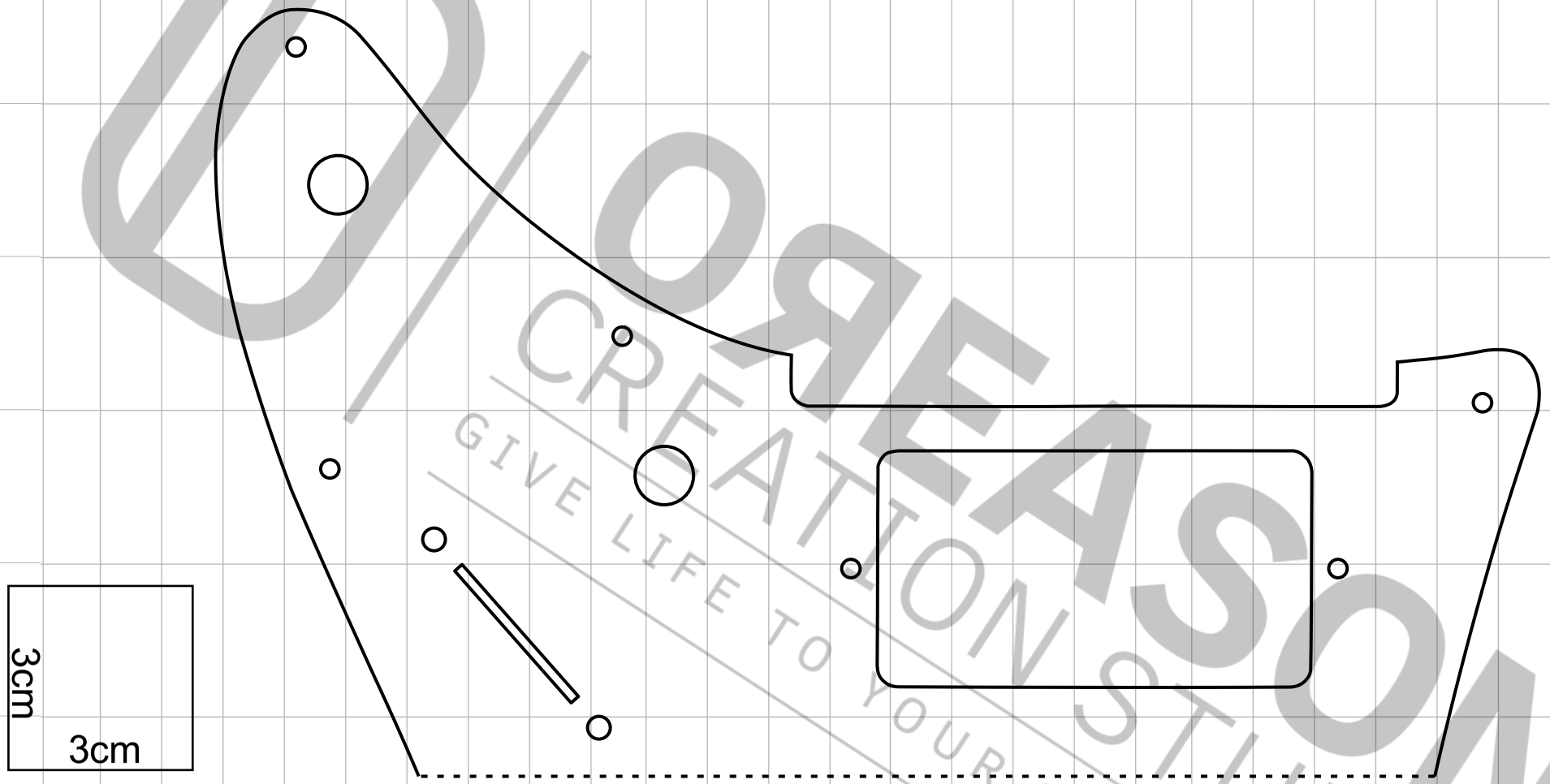

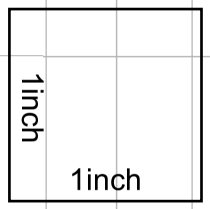

ORFASON
CREATION STUDIO
GIVE LIFE TO YOUR IMAGINATION