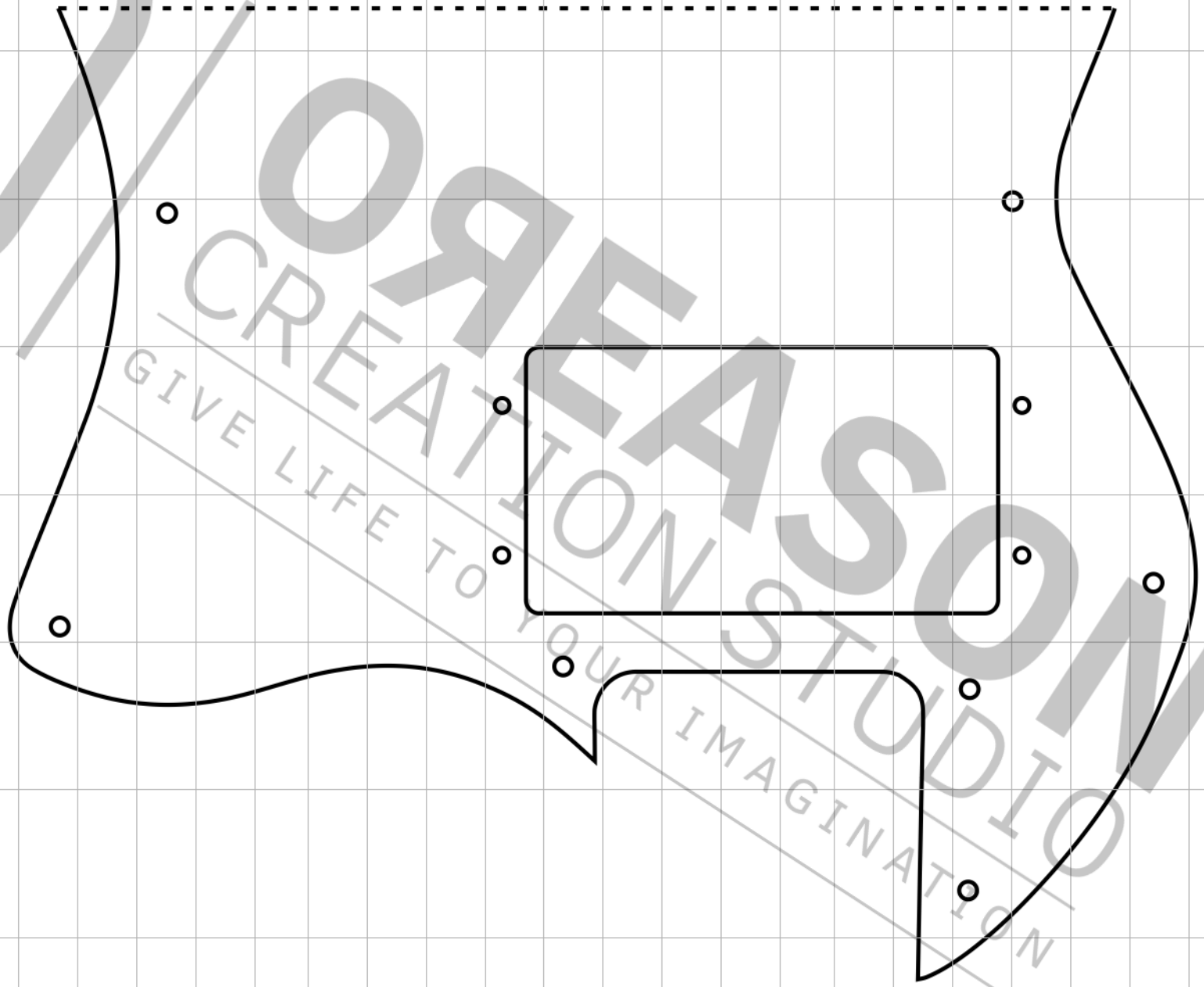

3cm

3cm

1inch

1inch

ORIGAMI CREATION STUDIO
GIVE LIFE TO YOUR IMAGINATION

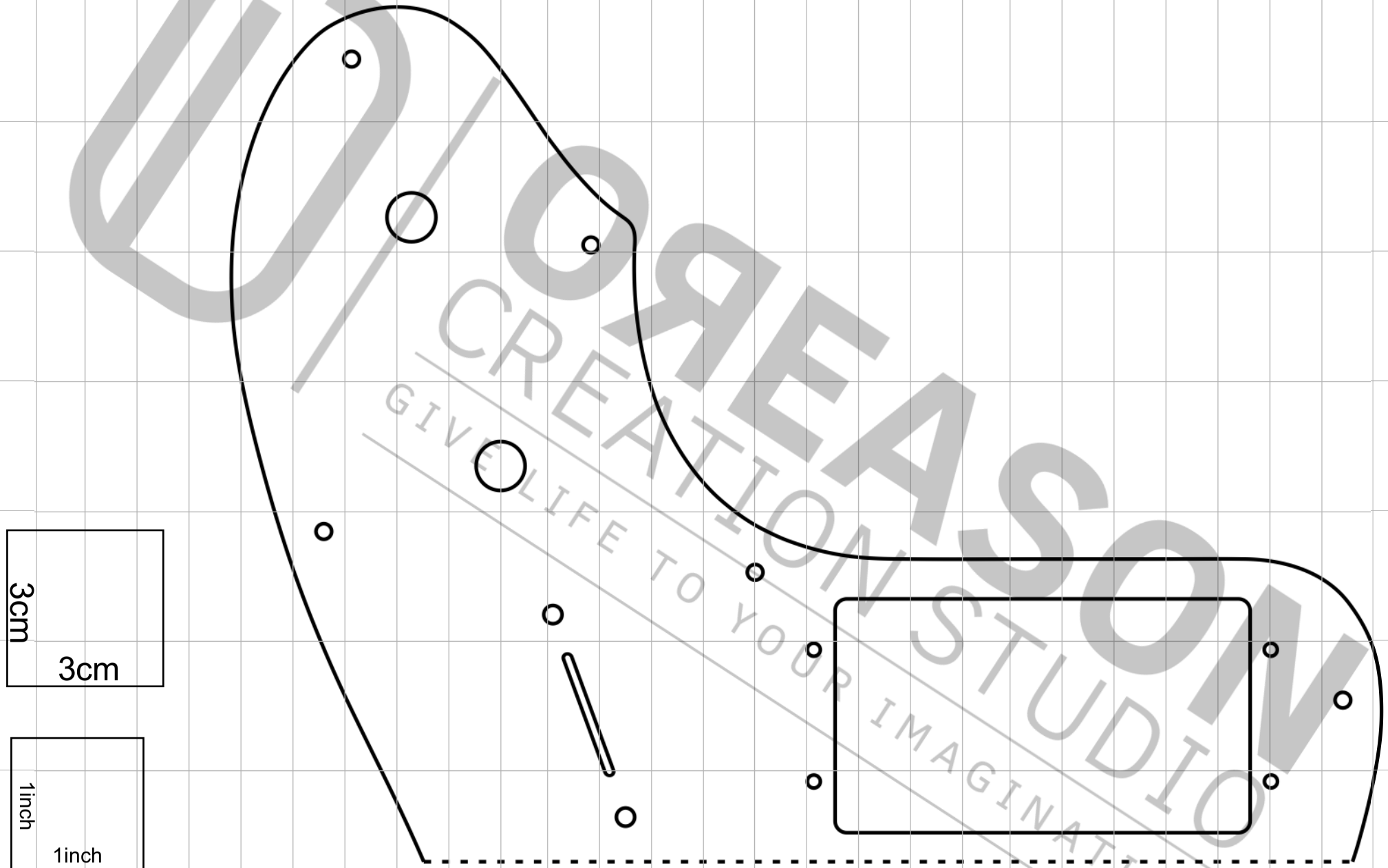

ORIGAMI CREATION STUDIO
GIVE LIFE TO YOUR IMAGINATION